# XT035HF01C_YWT 液晶显示模块

# 用户手册

## 版本信息

| 日期 | 版本号 | 更新内容及说明 | 备注 |
|---|---|---|---|
| 24.5.28 | A0 | 初版发行 | 初版 |
| | | | |

深圳市欣瑞达信息技术有限公司
400-069-8808
欣瑞达，客户信赖的长期合作伙伴
产品·方案·售后服务
为工控领域缔造完美显示
欣瑞达为工业控制应用终端提供高品质、个性化产品显示方案
Website:www.xrd-lcd.com
本公司通过ISO9001质量管理体系认证 邓白氏商业信息报告评估优质供应商 版权归欣瑞达所有 V 1.0

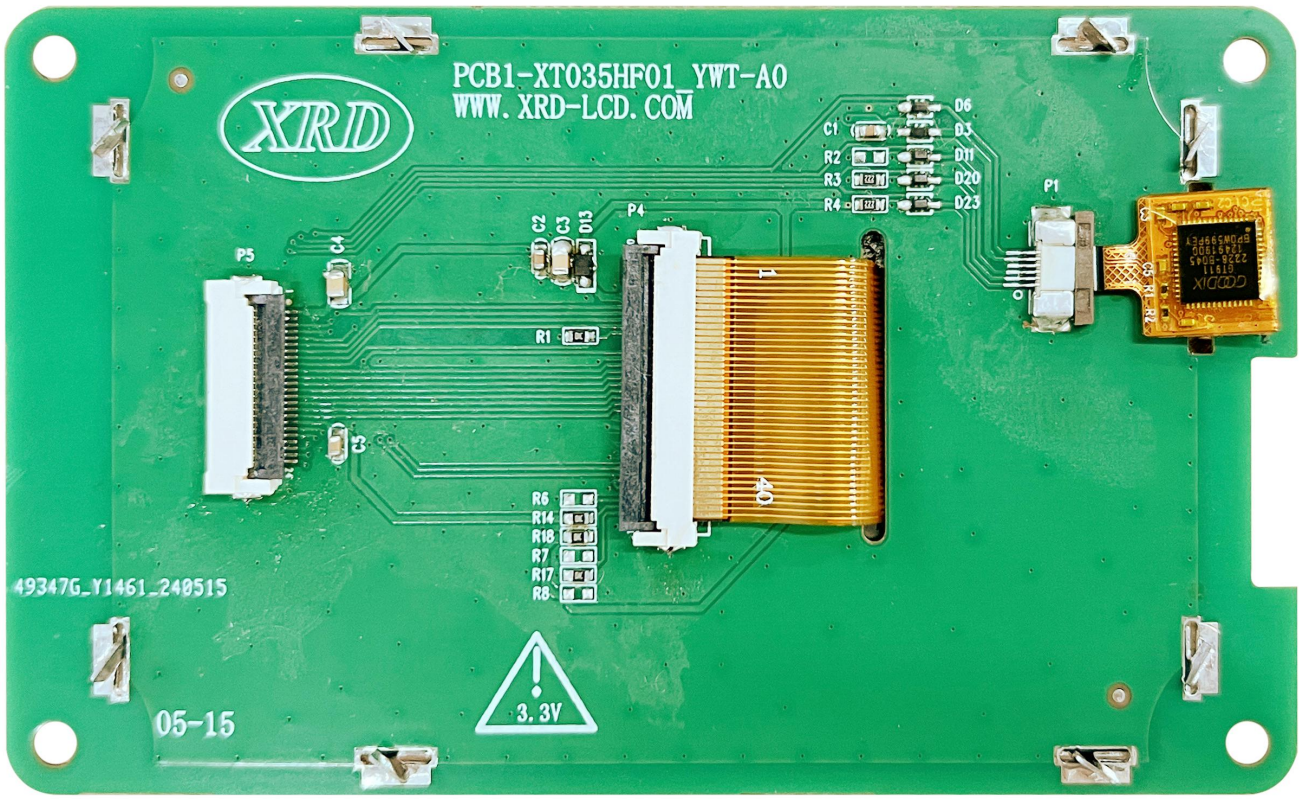
PCB1-XT035HF01_YWT-A0
WWW.XRD-LCD.COM
XRD
49347G_Y1461_240515
05-15
3.3V

# 1、功能介绍

XT035HF01C_YWT 是欣瑞达信息技术有限公司开发的 24P*0.5MM 接口液晶显示模块，该产品基于 3.5 英寸真彩液晶屏和五点电容式触摸屏开发，客户端接口包含 MCU8BIT 数据接口和 I2C 触摸屏控制接口，模块驱动板集成了显示屏所需的各种复杂电源模块，便于客户使用。

# 2、规格参数

**显示性能参数**

| 参数 | 数据 | 说明 |
|---|---|---|
| 显示尺寸（A.A.） | 48.96 (长)*73.44(宽) mm | 320*480 像素模式 |
| 分辨率 | 320*480 像素 | - |
| 背光模式 | LED | - |
| 背光亮度 | 300 nit | - |
| 背光寿命（h） | ≥30000 小时 | 亮度降为 50% |

**电性能参数**

| 参数 | 测试条件 | 最小值 | 典型值 | 最大值 | 单位 |
|---|---|---|---|---|---|
| 工作电压 | VDD | - | 3.3 | - | V |
| 工作电流 | VDD=3.3V,背光亮度最大 | - | 130 | - | mA |
| | VDD=3.3V，背光亮度最暗 | - | 3 | - | mA |
| | - | - | - | - | |
| | - | - | - | - | |
| 推荐工作电源：3.3V 2A 的直流稳压电源 | | | | | |

**可靠性参数**

| 参数 | 测试环境 | 最小值 | 典型值 | 最大值 | 单位 |
|---|---|---|---|---|---|
| 工作温度 | 3.3V 电压，湿度 60% | -25 | 25 | 70 | ℃ |
| 储存温度 | - | -30 | 25 | 80 | ℃ |
| 工作湿度 | - | 10% | 60% | 90% | RH |
| 三防处理 | - | - | - | - | - |
| ESD 防护等级 | 3C ESD-20 | - | - | - | - |
| 出厂前老化时间 | - | - | 8 | - | H |

# 3、P5 显示屏接口形式

系统控制板 LCD 信号接口采用 FFC/SM0.5*24P 插座作为连接器，接口示意图如下

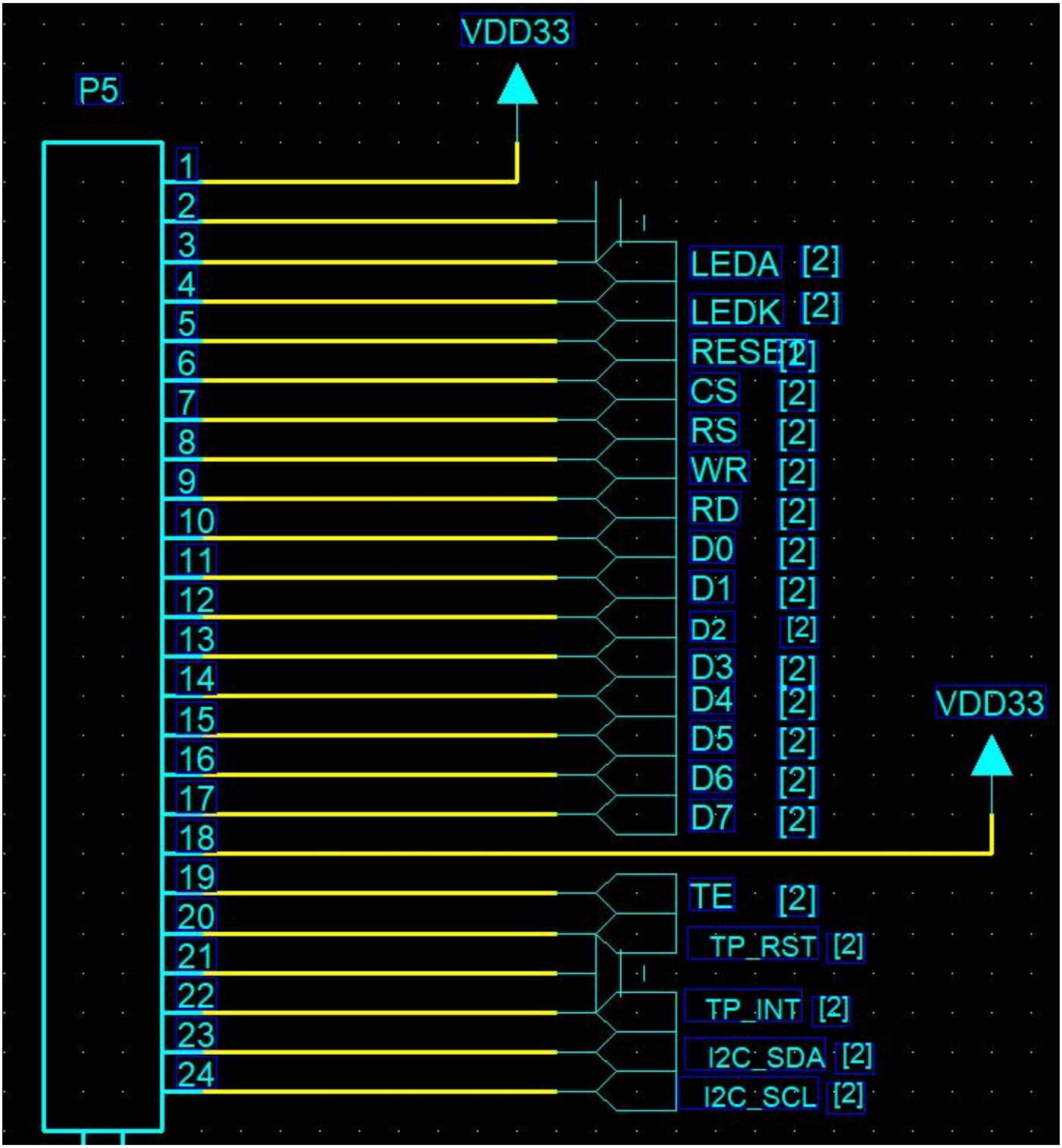


## 4、机械尺寸

- 机械尺寸参考如下图所示，未注公差为±0.30mm，单位：mm

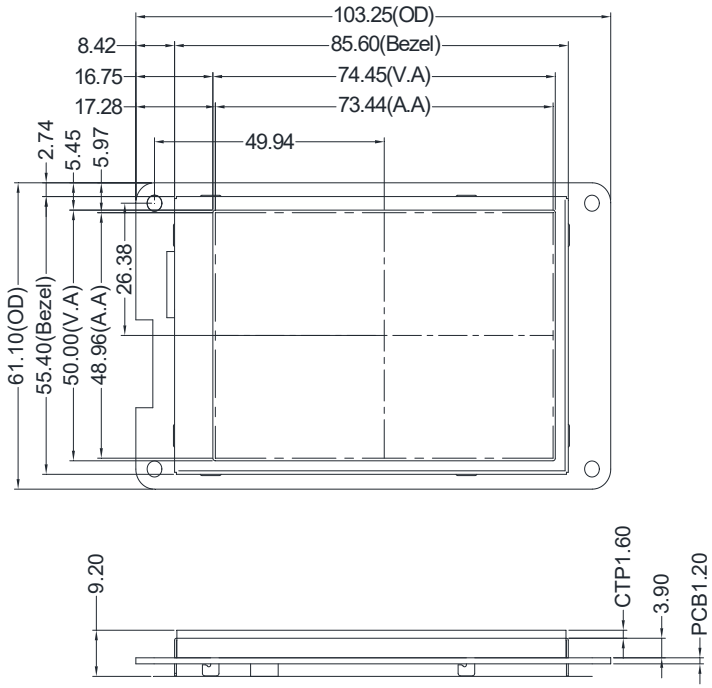
103.25(OD)
8.42
85.60(Bezel)
16.75
74.45(V.A)
17.28
73.44(A.A)
49.94
2.74
5.45
5.97
26.38
61.10(OD)
55.40(Bezel)
50.00(V.A)
48.96(A.A)

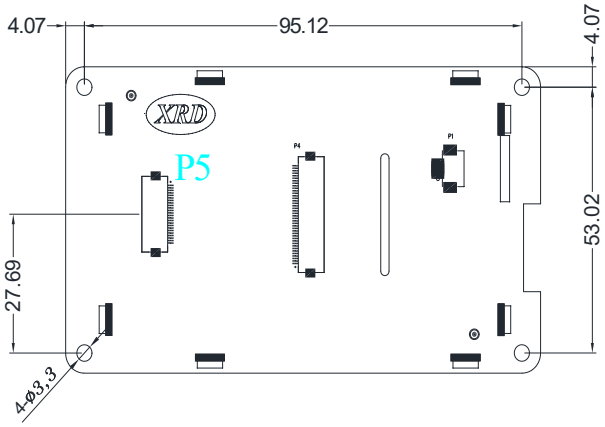
4.07
95.12
4.07
XRD
P5
53.02
27.69
4-Ø3.3


9.20
CTP1.60
3.90
PCB1.20

| REVISION RECORD | | | |
|---|---|---|---|
| LTR | ECO NO: | APPROVED: | DATE: |
| | | | |
| | | | |
| | | | |
| | | | |

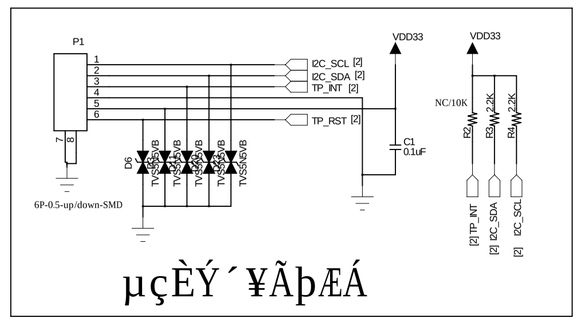


µçÈÝ´¥ÃþÆÁ

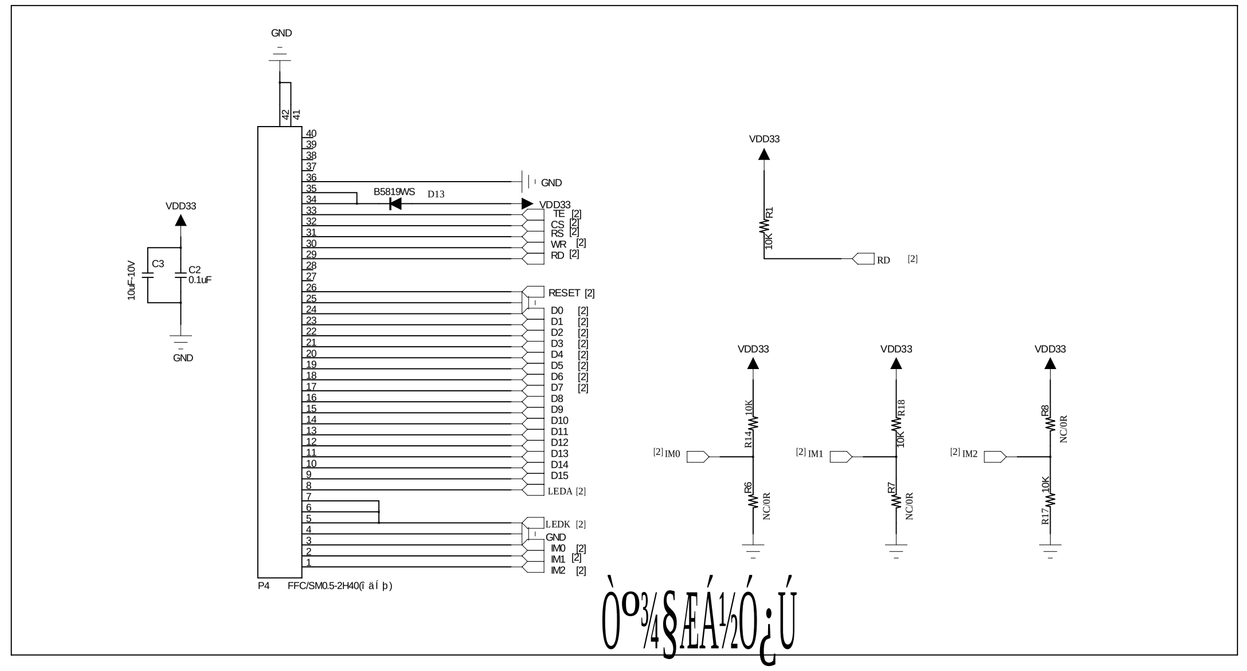


Òº¾§ÆÁ½Ó¿Ú

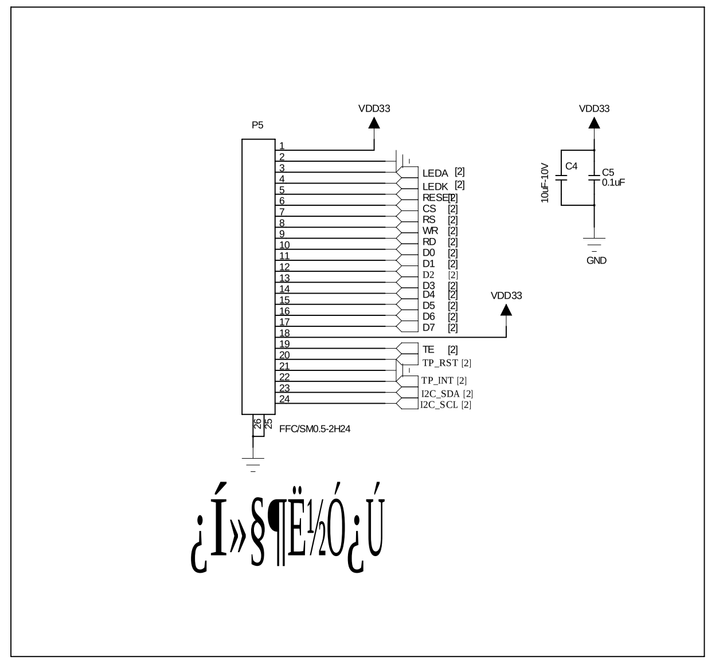


¿Í»§¶Ë½Ó¿Ú

| | | | | | |
|---|---|---|---|---|---|
| DRAWN: Bruce | DATED: <Drawn Date> | COMPANY: <ÉîÛÚÐÀÈð´ïµç×ÓÓÐÏÞ¹«Ë¾> | | | |
| CHECKED: <Checked By> | DATED: <Checked Date> | TITLE: PCB1-XG043FCU06-A2 | | | |
| QUALITY CONTROL: <QC By> | DATED: 2020.05.14 | CODE: <Code> | SIZE: A1 | DRAWING NO: <Drawing Number> | REV: A2 |
| RELEASED: <Released By> | DATED: <Release Date> | SCALE: <Scale> | | SHEET: 2 | |

# APPROVAL SHEET
# 承认书

| | |
|---|---|
| **Customer**<br>客户 | |
| **Material code**<br>物料编码 | |
| **Part No.**<br>零件编号 | **0350C028-S1T2200** |
| **Date**<br>时间 | **2022-11-22** |
| **Version**<br>版本 | **01** |
| **Remarks**<br>备注 | □Approval for Specification Only<br>■Approval for Specification and Sample<br>规格和样品批准 |

| **CUSTOMER** | | | **HXWY** | | |
|---|---|---|---|---|---|
| **APPROVED**<br>批准 | **CHECKED**<br>检查 | **PREPARED**<br>制作 | **APPROVED**<br>批准 | **CHECKED**<br>检查 | **PREPARED**<br>制作 |
| | | | | | |
| **Quality control**<br>品质 | **Engineer**<br>工程 | -------- | **Quality control**<br>品质 | **Engineer**<br>工程 | ------- |
| | | -------- | | | ------- |

**Revision Record**
**修订记录**

| Rev. No. | Date | Description<br>描述 |
|---|---|---|
| V01 | 2022-11-22 | Preliminary Specification Release.<br>初步规格发布 |
| | | |
| | | |
| | | |

# Contents
# 内容

**1. General Specifications ..... 1**
总体规格

**2. Mechanical Drawing ..... 2**
机械图纸

**3. Pin Assignments ..... 3**
引脚分配

**4. Electrical Specification ..... 4**
电子规格

4.1. DC Characteristics ..... 4
直流特性

4.2. Typical Operation Conditions ..... 4
平常运行条件

4.3. Backlight Circuit Characteristics ..... 4
背光线路特性

4.4. Power on/off Sequence ..... 6
上下电顺序

4.5. Timing for MCU/SPI Interface ..... 7
MCU/SPI 接口时序

4.6. Electro-Optical Characteristics ..... 10
光电特性

**5. Measurement System ..... 11**
检测系统

5.1. LCM Viewing Angle ..... 11
LCM 观看角度

5.2. Response Time ..... 11
反应时间

5.3. Contrast Ratio (CR) ..... 11
对比度

**6. Reliability Test Items ..... 12**
可靠性测试项目

**7. Suggestions for Using LCD Modules ..... 14**
使用 LCD 模块的建议

**8. Storage Method ..... 17**
储存方法

## 1. General Specifications

| Item 项目 | Contents 内容 | Unit 单位 |
|---|---|---|
| Size 尺寸 | 3.5’TFT | inch 英尺 |
| LCM Dimension<br>LCM 尺寸 | 54.48(W)*84.71(H)*2.2(D) | mm |
| LCD Active Area<br>LCD 显示区域 | 48.96*73.44 | mm |
| Number of Dots<br>点数 | 320*RGB*480 | pixel 像素 |
| LCD Type<br>LCD 种类 | a-Si TFT | |
| Viewing Direction<br>观看方向 | 12 O'CLOCK | |
| Driver IC<br>IC 驱动 | ST7796 | |
| Interface Type<br>接口类型 | MCU/SPI | |
| Operating Temperature<br>运行温度 | -20℃~70℃ | |
| Storage Temperature<br>储存温度 | -30℃~80℃ | |
| Backlight Type<br>背光源类型 | 6 LEDs | |
| Weight<br>重量 | TBD | g |

# 2. Mechanical Drawing

机械图纸

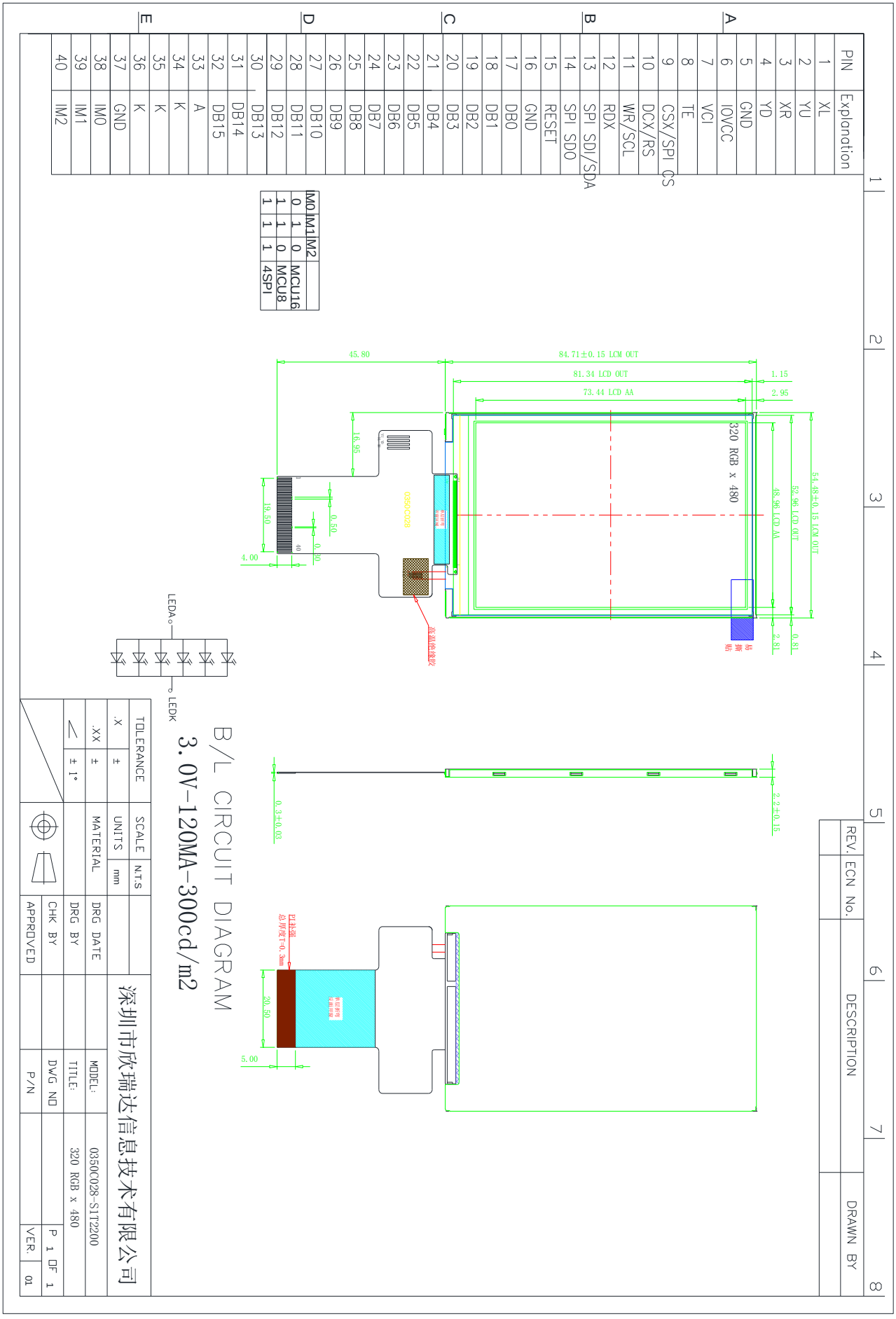

## 3. Pin Assignments

引脚分配

| Pin No. | Symbol | Description |
|---|---|---|
| **1** | XL | TOUCH PLANE PIN 触摸 |
| **2** | YU | TOUCH PLANE PIN 触摸 |
| **3** | XR | TOUCH PLANE PIN 触摸 |
| **4** | YD | TOUCH PLANE PIN 触摸 |
| **5** | GND | Ground for digital circuits.接地 |
| **6** | IOVCC | Power supply for logic interface 逻辑电压 |
| **7** | VCI | Power supply for digital interface 电源 |
| **8** | TE | Tearing effect signal is used to synchronize MCU to frame memory writing.切屏 |
| **9** | CS | Chip selection pin 片选 |
| **10** | DC/RS | Display data/command selection (RS) pin in MCU interface 数据命令 |
| **11** | WR/SCL | Write enable in MCU parallel interface.In SPI mode, this pin is used as SCL MCU 接口写入，SPI 接口时钟 |
| **12** | RD | Read enable in 8080 MCU parallel interface.读 |
| **13** | SDA | The data is latched on the rising edge of the SCL signal.输入 |
| **14** | SDO | The data is output on the falling edge of the SCL signal.输出 |
| **15** | RESET | This signal will reset the device and it must be applied to properly initialize the chip.复位 |
| **16** | GND | Ground for digital circuits.接地 |
| **17** | DB0 | DATA 数据 |
| **18** | DB1 | DATA 数据 |
| **19** | DB2 | DATA 数据 |
| **20** | DB3 | DATA 数据 |
| **21** | DB4 | DATA 数据 |
| **22** | DB5 | DATA 数据 |
| **23** | DB6 | DATA 数据 |
| **24** | DB7 | DATA 数据 |
| **25** | DB8 | DATA 数据 |
| **26** | DB9 | DATA 数据 |
| **27** | DB10 | DATA 数据 |
| **28** | DB11 | DATA 数据 |
| **29** | DB12 | DATA 数据 |
| **30** | DB13 | DATA 数据 |
| **31** | DB14 | DATA 数据 |
| **32** | DB15 | DATA 数据 |
| **33** | A | LED BACKLIGHT(ANODE)背光正极 |
| **34** | K | LED BACKLIGHT(CATHODE)背光负极 |
| **35** | K | LED BACKLIGHT(CATHODE)背光负极 |
| **36** | K | LED BACKLIGHT(CATHODE)背光负极 |
| **37** | GND | Ground for digital circuits.接地 |
| **38** | IM0 | Interface mode select.接口模式选择 |
| **39** | IM1 | Interface mode select.接口模式选择 |
| **40** | IM2 | Interface mode select.接口模式选择 |

# 4. Electrical Specification
电气特性

## 4.1. DC Characteristics
DC 特性

| Item | Symbol | Min | Typ. | Max | Unit |
|---|---|---|---|---|---|
| TFT gate on voltage<br>TFT 栅极导通电压 | VGH | -- | 15 | -- | V |
| TFT gate off voltage<br>TFT 栅极不通电压 | VGL | -- | -10 | -- | V |
| TFT common electrode Voltage<br>TFT 公共电机电压 | Vcom | -- | -- | -- | V |

## 4.2. Typical Operation Conditions
平常运行条件

| Item | Symbol | Min. | Typ. | Max. | Unit |
|---|---|---|---|---|---|
| Analog Supply Voltage<br>模拟电源电压 | VCI | -- | 2.8 | -- | V |
| Digital Supply Voltage<br>数字电源电压 | VDD | -- | 2.8 | -- | V |
| I/O Supply Voltage<br>I/O 电源电压 | IOVCC | -- | 1.8 | 3.3 | V |
| Input High Voltage<br>输入高电压 | VIH | 0.8*IOVCC | - | IOVCC | V |
| Input Low Voltage<br>输入低电压 | VIL | 0 | - | 0.2*IOVCC | V |
| Output High Voltage<br>输出高电压 | VOH | 0.8*IOVCC | - | - | V |
| Output Low Voltage<br>输出低电压 | VOL | - | - | 0.2*IOVCC | V |

## 4.3. Backlight Circuit Characteristics

背光源线路特性

| Item 项目 | Symbol 标志 | Min. | Typ. | Max. | Unit |
|---|---|---|---|---|---|
| LED Current 电流 LED | IB | -- | 120 | -- | mA |
| LED Voltage 电压 LED | Vf | 2.8 | 3.0 | 3.3 | V |
| Brightness 亮度 of LCM LCM | L | | 300 | | cd/m2 |

## 4.4. Power on/off Sequence

上下电顺序

VDDI and VDD can be applied in any order.

VDD and VDDI can be power down in any order.

During power off, if LCD is in the Sleep Out mode, VDD and VDDI must be powered down minimum 120msec after RESX has been released.

During power off, if LCD is in the Sleep In mode, VDDI or VDD can be powered down minimum 0msec after RESX has been released.

CSX can be applied at any timing or can be permanently grounded. RESX has priority over CSX.

*Note 1: There will be no damage to the display module if the power sequences are not met.*

*Note 2: There will be no abnormal visible effects on the display panel during the Power On/Off Sequences.*

*Note 3: There will be no abnormal visible effects on the display between end of Power On Sequence and before receiving Sleep Out command. Also between receiving Sleep In command and Power Off Sequence.*

*Note 4: If RESX line is not held stable by host during Power On Sequence as defined in the sequence below, then it will be necessary to apply a Hardware Reset (RESX) after Host Power On Sequence is complete to ensure correct operation. Otherwise function is not guaranteed.*

The power on/off sequence is illustrated below (320RGB x 480)

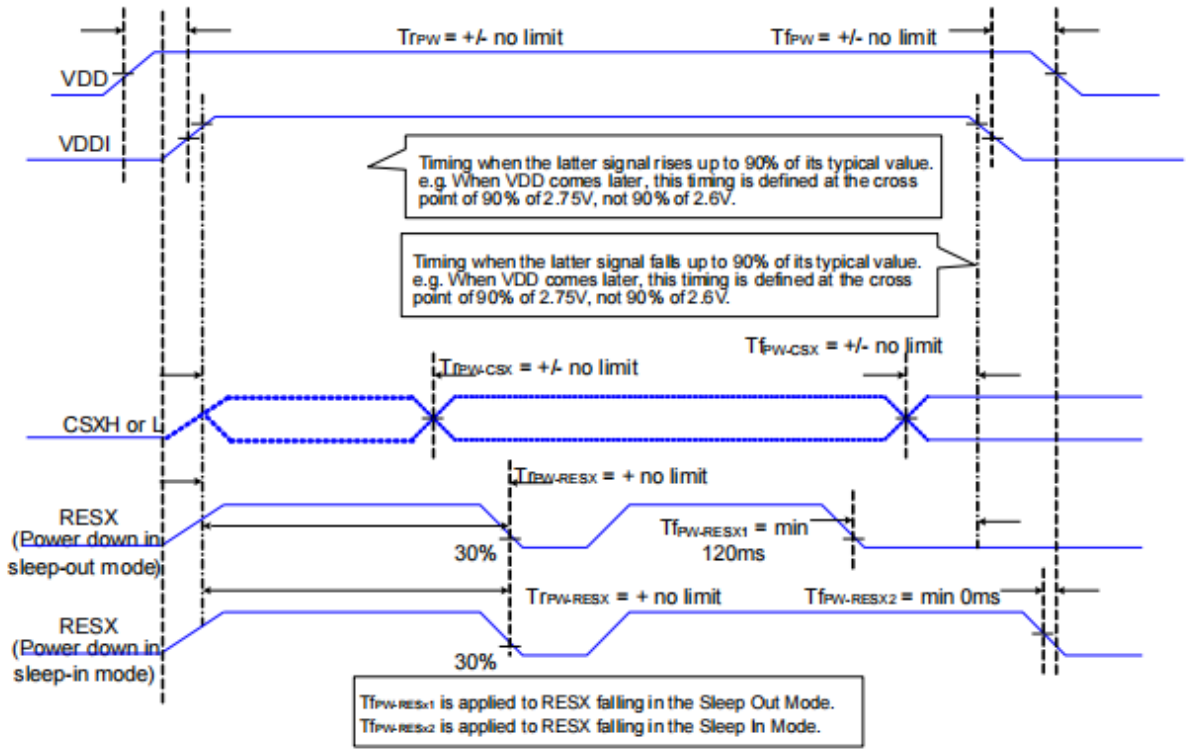

## 4.5. Timing for MCU/SPI Interface

MCU/SPI 接口时序

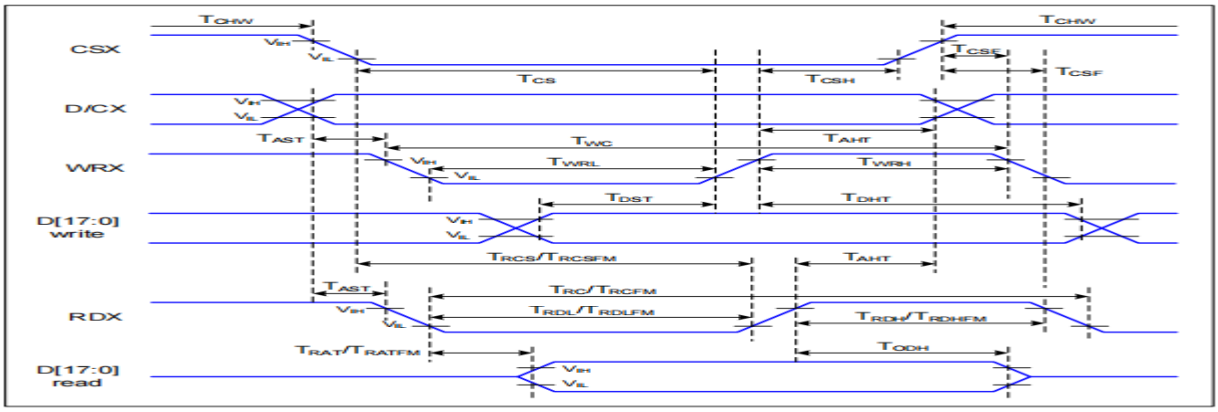


Parallel Interface Timing Characteristics (8080-Series MCU Interface)

*VDDI=1.8V,VDDA=2.8V, AGND=DGND=0V, Ta=25 ℃*

| Signal | Symbol | Parameter | Min | Max | Unit | Description |
|---|---|---|---|---|---|---|
| D/CX | $T_{AST}$ | Address setup time | 0 | | ns | - |
| | $T_{AHT}$ | Address hold time (Write/Read) | 10 | | ns | |
| CSX | $T_{CHW}$ | Chip select "H" pulse width | 0 | | ns | - |
| | $T_{CS}$ | Chip select setup time (Write) | 15 | | ns | |
| | $T_{RCS}$ | Chip select setup time (Read ID) | 45 | | ns | |
| | $T_{RCSFM}$ | Chip select setup time (Read FM) | 355 | | ns | |
| | $T_{CSF}$ | Chip select wait time (Write/Read) | 10 | | ns | |
| | $T_{CSH}$ | Chip select hold time | 10 | | ns | |
| WRX | $T_{WC}$ | Write cycle | 66 | | ns | |
| | $T_{WRH}$ | Control pulse "H" duration | 15 | | ns | |
| | $T_{WRL}$ | Control pulse "L" duration | 15 | | ns | |
| RDX (ID) | $T_{RC}$ | Read cycle (ID) | 160 | | ns | When read ID data |
| | $T_{RDH}$ | Control pulse "H" duration (ID) | 90 | | ns | |
| | $T_{RDL}$ | Control pulse "L" duration (ID) | 45 | | ns | |
| RDX (FM) | $T_{RCFM}$ | Read cycle (FM) | 450 | | ns | When read from frame memory |
| | $T_{RDHFM}$ | Control pulse "H" duration (FM) | 90 | | ns | |
| | $T_{RDLFM}$ | Control pulse "L" duration (FM) | 355 | | ns | |
| D[17:0] | $T_{DST}$ | Data setup time | 10 | | ns | For CL=30pF |
| | $T_{DHT}$ | Data hold time | 10 | | ns | |
| | $T_{RAT}$ | Read access time (ID) | - | 40 | ns | |
| | $T_{RATFM}$ | Read access time (FM) | - | 340 | ns | |
| | $T_{ODH}$ | Output disable time | 20 | 80 | ns | |

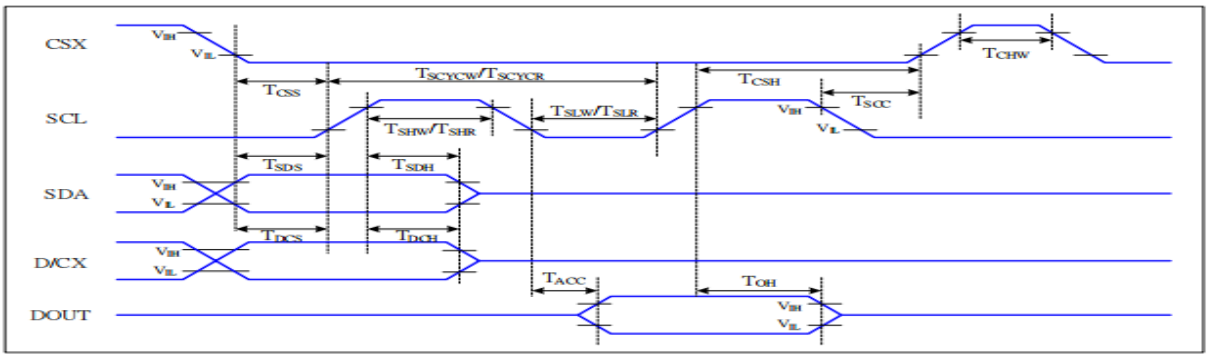


4-SPI Interface Timing Characteristics

*VDDI=1.8V,VDDA=2.8V, AGND=DGND=0V, Ta=25 ℃*

| Signal | Symbol | Parameter | MIN | MAX | Unit | Description |
|---|---|---|---|---|---|---|
| CSX | $T_{CSS}$ | Chip select setup time (write) | 15 | | ns | |
| | $T_{CSH}$ | Chip select hold time (write) | 15 | | ns | |
| | $T_{CSS}$ | Chip select setup time (read) | 60 | | ns | |
| | $T_{SCC}$ | Chip select hold time (read) | 65 | | ns | |
| | $T_{CHW}$ | Chip select "H" pulse width | 40 | | ns | |
| SCL | $T_{SCYCW}$ | Serial clock cycle (Write) | 66 | | ns | -write command & data ram |
| | $T_{SHW}$ | SCL "H" pulse width (Write) | 15 | | ns | |
| | $T_{SLW}$ | SCL "L" pulse width (Write) | 15 | | ns | |
| | $T_{SCYCR}$ | Serial clock cycle (Read) | 150 | | ns | -read command & data ram |
| | $T_{SHR}$ | SCL "H" pulse width (Read) | 60 | | ns | |
| | $T_{SLR}$ | SCL "L" pulse width (Read) | 60 | | ns | |
| D/CX | $T_{DCS}$ | D/CX setup time | 10 | | ns | |
| | $T_{DCH}$ | D/CX hold time | 10 | | ns | |
| SDA (DIN) | $T_{SDS}$ | Data setup time | 10 | | ns | |
| | $T_{SDH}$ | Data hold time | 10 | | ns | |
| DOUT | $T_{ACC}$ | Access time | 10 | 50 | ns | For maximum CL=30pF |
| | $T_{OH}$ | Output disable time | 15 | 50 | ns | For minimum CL=8pF |

## 4.6. Electro-Optical Characteristics

光电特性

| Item | Symbol | Condition | Specification | | | Unit | Remark |
|---|---|---|---|---|---|---|---|
| | | | Min. | Typ. | Max. | | |
| Response time (By Quick) | Tr+Tf | θ= 0° | - | 20 | 40 | ms | Note 5 |
| Contrast ratio | CR | θ= 0° | - | 500 | - | | Note 2,6 |
| Viewing angle | Top | CR≧10 | - | 60 | - | deg. | Note 2,6,7 |
| | Bottom | CR≧10 | - | 60 | - | | |
| | Left | CR≧10 | - | 70 | - | | |
| | Right | CR≧10 | - | 70 | - | | |
| Color chromaticity ( CF only with ITO, light source is C light, CIE 1931) | Wx | θ= 0° | 0.292 | 0.307 | 0.322 | | Note 3 |
| | Wy | | 0.312 | 0.327 | 0.342 | | |
| | Rx | | 0.609 | 0.624 | 0.639 | | |
| | Ry | | 0.316 | 0.331 | 0.346 | | |
| | Gx | | 0.281 | 0.296 | 0.311 | | |
| | Gy | | 0.562 | 0.577 | 0.592 | | |
| | Bx | | 0.128 | 0.143 | 0.158 | | |
| | By | | 0.094 | 0.109 | 0.124 | | |
| NTSC | | | 57% | 60% | - | | Note 3 |
| Cross talk | Ct | | - | - | 2% | | Note 9 |
| Transmittance | Trans | | - | 5.50% | - | | Note 4 |

## 5. Measurement System
测试系统

### 5.1. LCM Viewing Angle
LCM 观看角度

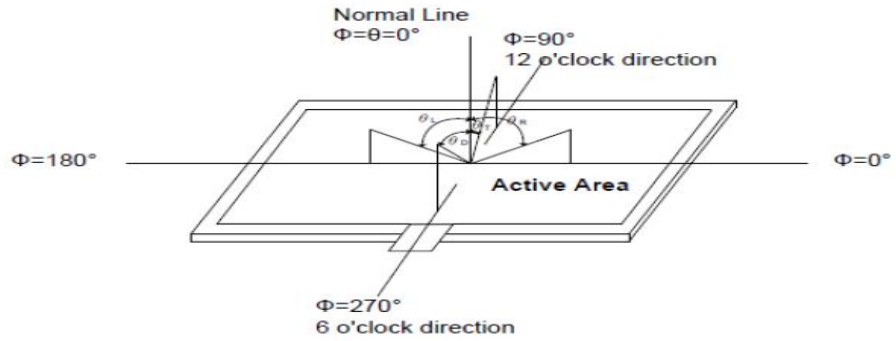


Viewing angle is the angle at which the contrast ratio is greater than 10.The angles are determined for the horizontal or x axis and the vertical or y axis with respect to the z axis which is normal to the LCD surface.观看角度是对比度大于 10 的角度。角度是针对水平（x 轴）和垂直（y 轴）相对于与 LCD 表面垂直的 z 轴确定的。

### 5.2. Response Time
响应时间

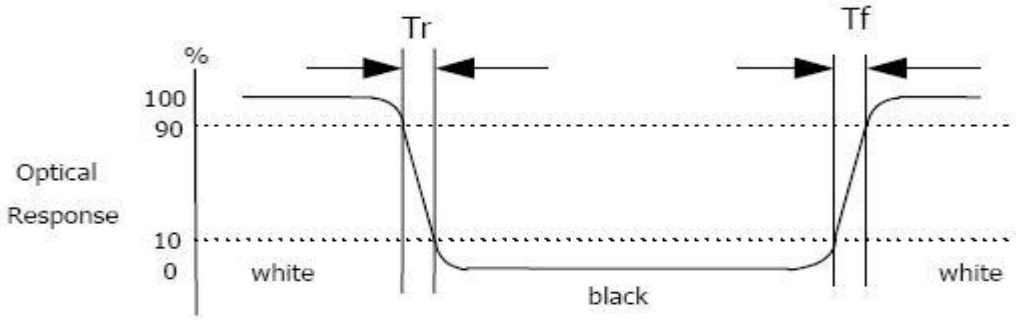


Response time is the time required for the display to transition from white to black (Rising time, $T_r$) and from black to white (Falling time, $T_f$) for additional information.响应时间是显示器从白色过渡到黑色（上升时间，Tr）和从黑色过渡到白色（下降时间，Tf）以获取附加信息所需的时间。

### 5.3. Contrast Ratio (CR)
对比度

Contrast Ratio (CR) is defined mathematically as:
对比度 (CR) 在数学上定义为：

$$\text{Contrast Ratio} = \frac{\text{Surface Luminance with all white pixels}}{\text{Surface Luminance with all black pixels}}$$

$$\text{对比度} = \frac{\text{全白像素的表面亮度}}{\text{全黑像素的表面亮度}}$$

Surface luminance is the center point across the LCD surface 500mm from the surface with all pixels displaying white.

**表面亮度是整个 LCD 表面的中心点，距离表面 500 毫米，所有像素都显示白色。**

## 6. Reliability Test Items

可靠性测试项目

| Test Item 测试项目 | Test Condition 测试状态 | Test result determinant gist 测试结果决定性要点 |
|---|---|---|
| High temperature storage 高温储存 | 80±3℃,48H; | 1. Inspection after 2~4hours storage at room temperature, the sample shall be free from defects:<br>a). Air bubble in the LCD;<br>b). Non-display;<br>c). Glass crack;<br>2. The electrical characteristics requirements shall be satisfied.<br>1. 样品在室温下存放 2~4 小时后检验，样品应无缺陷：<br>a) LCD 中有气泡；<br>b)不显示；<br>C）玻璃裂纹；<br>2、满足电气特性要求 |
| Low temperature storage 低温储存 | -30±3℃,48H; | |
| High temperature operation 高温运行 | 70±3℃,48H; | |
| Low temperature operation 低温运行 | -20±3℃,48H; | |
| High temperature / humidity 高温/亮度 | 60℃ ±3℃,90%±3%RH,48H; | |
| Thermal Shock 热冲击 | -20℃/0.5h~+70℃/0.5h<br>for a total 24 cycles；24 小时总循环 | |
| Vibration Test 震动测试 | Frequency:10Hz~55Hz~10Hz;<br>Amplitude:1.5mm, X, Y, Z<br>direction for total 1H;<br>(Packing condition) | |
| ESD test ESD 测试 | ±4KV, Human Body Mode,150pF/330Ω;<br>±8KV, Air Mode, 150pF/330Ω; | |

**Remark：**

**备注**

1.The test samples should be applied to only one test item.
测试样品只能应用于一个测试项目。

2.Sample size for each test item is 2pcs.

每个测试项目的样本大小为 2 个。

3.Failure Judgment Criterion: Basic Specification, Electrical Characteristic, Mechanical

Characteristic, Optical Characteristic.

3.故障判断标准：基本规格、电气特性、机械特性、光学特性。

## 7. Suggestions for Using LCD Modules

LCD 模块的使用建议

1) The display panel is made of glass and polarizer. As glass is fragile. It tends chipped during handling especially on the edges. Please avoid dropping or jarring. Do not subject it to a mechanical shock by dropping it or impact.

显示面板由玻璃和偏光片制成。 因为玻璃易碎，在处理过程中，特别是在边缘处，它会比较容易碎裂。 请避免掉落或震动。 请勿使其跌落或撞击而受到机械冲击。

2) If the display panel is damaged and the liquid crystal substance leaks out, be sure not to get any in your mouth. If the substance contacts your skin or clothes, wash it off using soap and water.

如果显示面板损坏和液晶物质泄漏，请务必不要让其进入您的嘴里。 如果该物质接触到您的皮肤或衣服，请用肥皂和水清洗。

3) Do not apply excessive force to the display surface or the adjoining areas since this may cause the color tone to vary. Do not touch the display with bare hands. This will stain the display area and degraded insulation between terminals (some cosmetics are determined to the polarizer).

请勿对显示器表面或相邻区域施加过大的力，因为这可能会导致色调发生变化。 请勿赤手触摸显示屏。 这会弄脏显示区域。

4) The polarizer covering the display surface of the LCD module is soft and easily scratched. Please handle this polarizer carefully. Please do not touch, push or rub the exposed polarizers with anything harder than an HB pencil lead (glass, tweezers, etc.). Please do not put or attach anything on the display area to avoid leaving marks on it. Condensation on the surface and contact with terminals due to cold will be damaged, or dirty the polarizer. After products are tested at low temperature they must be warmed up in a container before coming in to contact with room temperature air.

覆盖在液晶模组显示面上的偏光片柔软，且容易划伤。 请小心处理这个偏光片。 请不要用比 HB 铅笔芯（玻璃、镊子等）更硬的任何东西接触、推动或摩擦暴露的偏光片。 请勿在展示区域放置或粘贴任何物品，以免在其上留下痕迹。其表面冷凝和因寒冷而与端子接触会损坏或弄脏偏光片。 产品在低温下测试后，必须在容器中预热，然后再与室温空气接触。

5) If the display surface becomes contaminated, exhale on the surface and gently wipe it with a soft dry cloth. If it is heavily contaminated, moisten cloth with one of the following solvents

- Isopropyl alcohol
- Ethyl alcohol

Do not scrub hard to avoid damaging the display surface.

如果显示器表面被污染，请在表面呼气并用柔软的无尘布轻轻擦拭。 如果它被严重污染，请用以下溶剂之一弄湿布

- 无水丙醇

- 乙醇

请勿用力擦洗，以免损坏显示器表面。

6) Solvents other than those above-mentioned may damage the polarizer. Especially, do not use the following.

- Water
- Ketone
- Aromatic solvents

Wipe off saliva or water drops immediately, contact with water over a long period of time may cause deformation or color fading. Avoid contact with oil and fats.

6) 上述以外的溶剂可能会损坏偏光片。 请勿使用以下溶剂。

- 水
- 丙酮

立即擦掉唾液或水滴，长时间与水接触可能会导致变形或褪色。 避免接触油和脂肪。

7) Exercise care to minimize corrosion of the electrode. Corrosion of the electrodes is accelerated by water droplets, moisture condensation or a current flow in a high-humidity environment.

小心操作以尽量减少电极的腐蚀。 水滴、湿气凝结或电缆会加速电极的腐蚀。

8) Install the LCD Module by using the mounting holes. When mounting the LCD module make sure it is free of twisting, warping and distortion. In particular, do not forcibly pull or bend the I O cable or the backlight cable.

使用安装孔安装 LCD 模块。 安装 LCD 模块时，请确保其没有扭曲、翘曲和变形。 尤其不要强行拉扯或弯曲 I O 电缆或背光电缆。

9) Do not attempt to disassemble or process the LCD module.

请勿尝试拆卸或加工 LCD 模块。

10) NC terminal should be open. Do not connect anything.

NC 终端应打开。 不要连接任何东西。

11) If the logic circuit power is off, do not apply the input signals.

如果逻辑电路电源关闭，请勿施加输入信号。

12) Electro-Static Discharge Control, since this module uses a CMOS LSI, the same careful attention should be paid to electrostatic discharge as for an ordinary CMOS IC. To prevent destruction of the elements by static electricity, be careful to maintain an optimum work environment.

- Before removing LCM from its packing case or incorporating it into a set, be sure the module and your body have the same electric potential. Be sure to ground the body when handling the LCD modules.
- Tools required for assembling, such as soldering irons, must be properly grounded. Make certain

the AC power source for the soldering iron does not leak. When using an electric screwdriver to attach LCM, the screwdriver should be of ground potentiality to minimize as much as possible any transmission of electromagnetic waves produced sparks coming from the commutator of the motor.

- To reduce the amount of static electricity generated, do not conduct assembling and other work under dry conditions. To reduce the generation of static electricity be careful that the air in the work is not too dry. A relative humidity of 50%-60% is recommended. As far as possible make the electric potential of your work clothes and that of the work bench the ground potential.

- The LCD module is coated with a film to protect the display surface. Exercise care when peeling off this protective film since static electricity may be generated.

静电放电控制，由于该模块使用 CMOS LSI，因此应与普通 CMOS IC 一样注意静电放电。 为防止静电损坏元件，请注意保持最佳工作环境。

- 从包装箱中取出 LCM 或将其装入套件之前，请确保

模块和您的身体具有相同的电势。 处理 LCD 模块时一定要把身体接地。

- 组装所需的工具，例如烙铁，必须正确接地。 确保烙铁的交流电源不漏电。 使用电动螺丝刀安装 LCM 时，螺丝刀应具有接地电位，以尽可能减少来自电机换向器产生的火花的电磁波传输。

- 为减少静电产生量，请勿在干燥条件下进行组装和其他工作。 为减少静电的产生，请注意工作中的空气不要太干燥。 建议相对湿度为 50%-60%。 尽量使您的工作服和工作台的电位为地电位。

- LCD 模块涂有一层薄膜以保护显示表面。 剥离此保护膜时请小心，因为可能会产生静电。

13) Since LCM has been assembled and adjusted with a high degree of precision, avoid applying excessive shocks to the module or making any alterations or modifications to it.

- Do not alter, modify or change the shape of the tab on the metal frame.

- Do not make extra holes on the printed circuit board, modify its shape or change the positions of components to be attached.

- Do not damage or modify the pattern writing on the printed circuit board.

- Absolutely do not modify the zebra rubber strip (conductive rubber) or heat seal connector.

- Except for soldering the interface, do not make any alterations or modifications with a soldering iron.

- Do not drop, bend or twist the LCM.

由于 LCM 已高精度组装和调整，请避免对模块施加过大的冲击或对其进行任何改动或修改。

- 请勿改动、修改或改变金属框架上拉环的形状。

- 不要在印刷电路板上打额外的孔，修改其形状或改变要连接的组件的位置。

- 不要损坏或修改印刷电路板上的图案书写。

- 绝对不要改装斑马橡胶条（导电橡胶）或热封接头。

- 除焊接接口外，请勿使用烙铁进行任何改动或修改。
- 不要掉落、弯曲或扭曲 LCM。

## 8. Storage Method

储存方法

1) Store in an ambient temperature of 23℃±5℃, and in a relative humidity of 55%±15%. Don't exceed 12 months and expose to sunlight or fluorescent light.

环境温度为 23°C±5°C，相对湿度为 55%±15%。 不要超过 12 个月并暴露在阳光或荧光灯下。

2) Store in a clean environment, free from dust, active gas, and solvent.

存放在清洁的环境中，无灰尘、无活性气体和溶剂。

3) LCM module is stored in warehouse, Store in antistatic container, there may be air bubbles between the protective film on the surface of polarizer and polarizer. It can only be found under LED light, before production, IQC should be inspected directly by LED light, if residual traces are found, alcohol should be used to wipe them.

LCM 模块存放在仓库中，偏光片和偏光片表面的保护膜之间可能会有气泡。 只能在 LED 灯下发现，生产前，IQC 应直接用 LED 灯检查，如有残留痕迹，可用酒精擦拭。

图纸名称：TP工程图 版本： A /0

## 正视图

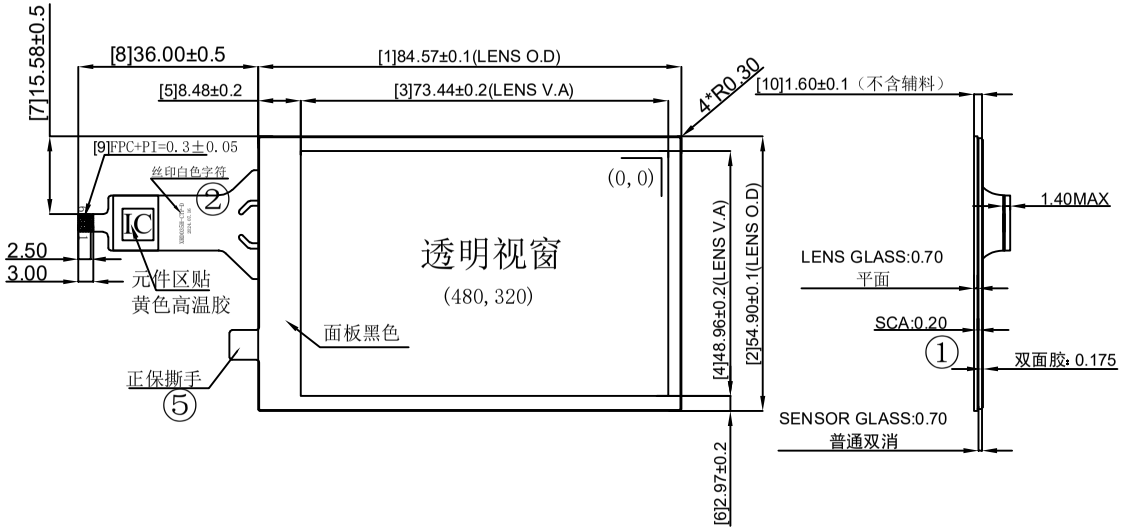


## 侧视图

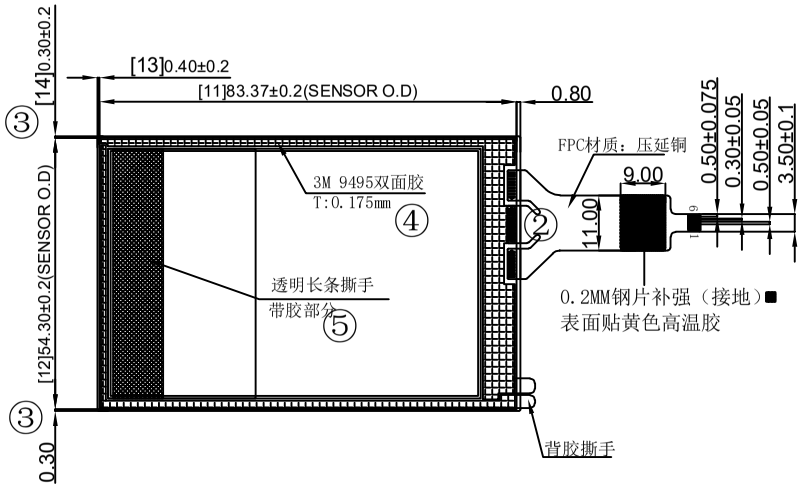


## 背视图

## TP逻辑图

| PIN# | Name |
|---|---|
| 1 | SCL |
| 2 | SDA |
| 3 | INT |
| 4 | GND |
| 5 | VDD-3.3V |
| 6 | RST |

| 技术参数： |
|---|
| 1.IC及通道数：GT911 RX9*TX12 |
| Cover GLASS:0.7mm 旭硝子 |
| SCA:0.2mm |
| ITO SENSOR:0.7mm 双80-120双消 |
| 引 线:FPC (PINCH=0.5mm) |
| 总厚度：1.6±0.1mm |
| 2.工作电压：3.3V |
| 3.透光率：≥85% |
| 4.表面硬度：6H |
| 5.工作环境：-20℃~+60℃，≤90%RH |
| 6.储存环境：-30℃~+70℃，≤90%RH |

| 说明： |
|---|
| 1.结构类型：G+G结构. |
| 2.未标注公差 ：±0.20； |
| 3.符合ROHS标准； |

| 版本 | 描述 | 日期 |
|---|---|---|
| V00 | 新设计 | 2024/07/15 |

3RD ANGLE PROJN

深圳市欣瑞达信息技术有限公司

| | | | |
|---|---|---|---|
| 客户编号 | GY-G30486A-01 | 制图 | TCY |
| 文件编号 | A035XXXA01 | 审核 | |
| 日期 | 2024/07/15 | 批准 | |
| 比例 | 1:1 | 单位 | mm |